Ref No,530-06-1975-JAN

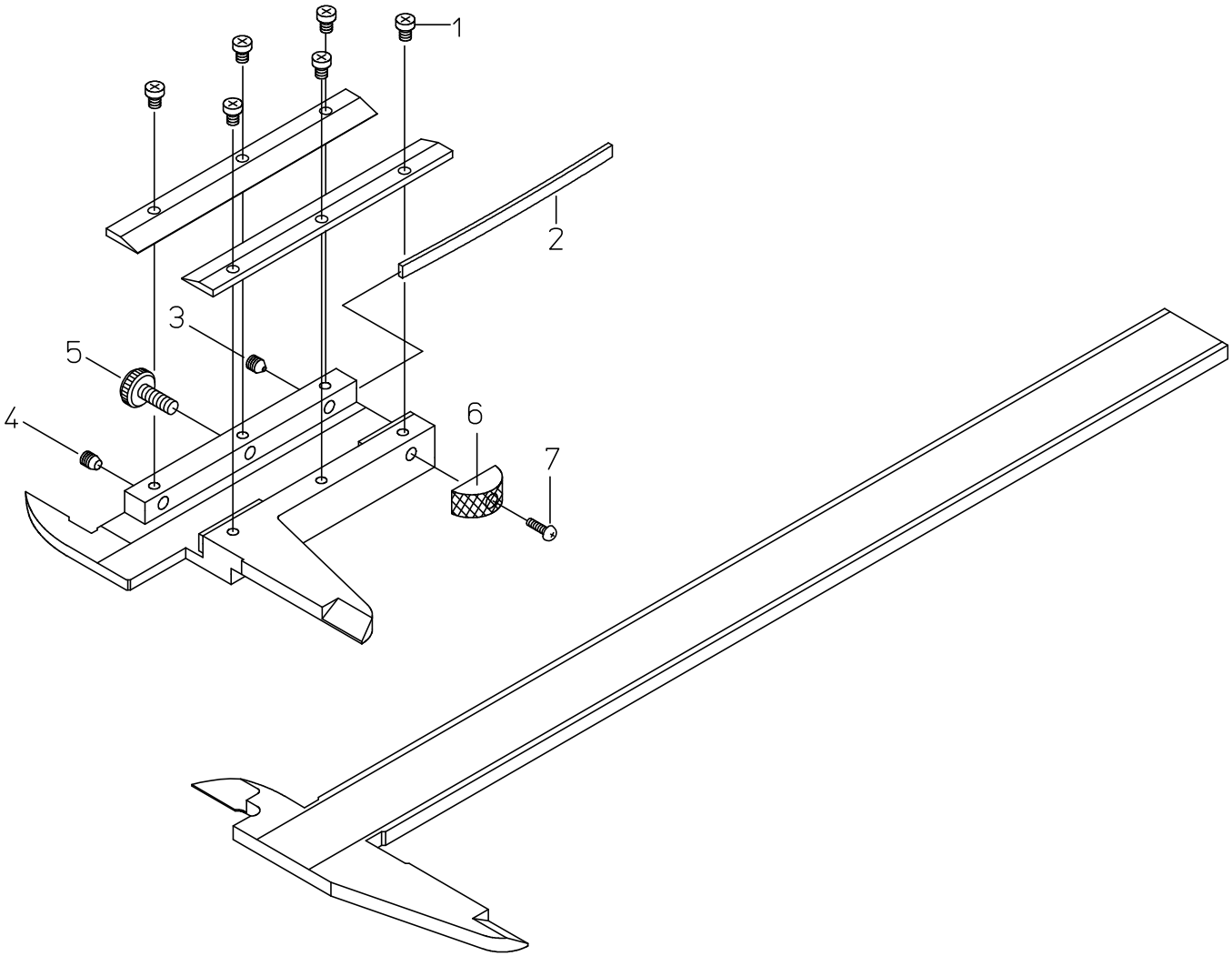

書類NO, 530-06

KEY NO,	ブヒンメイ	PART NAME	販売区分 CATEGORY	CODE NO, コードNO, 530-501 N60	530-502 N100					備考 COMMENTS
1	ｼﾞｭｳｼﾞﾅﾍﾞｺﾈｼﾞ	SCREW PLATE		124667						
2	ｲﾀﾊﾞﾈ	GIB, SLIDER		108000	108056					
3	ｾｯﾄﾈｼﾞ	SCREW, GIB SETTING		132635	134577					
4	ｵｼﾈｼﾞ	SCREW, GIB PRESSING		132636	134581					
5	ｸﾗﾝﾌﾟﾈｼﾞ	CLAMP, SLIDER		100951	134586					
6	ﾕﾋﾞｶｹ	KNOB, SLIDER		132641	110580					
7	ｼﾞｭｳｼﾞﾅﾍﾞｺﾈｼﾞ	SCREW, KNOB		121036	121037					