Ref No,530-07-2005-OCT

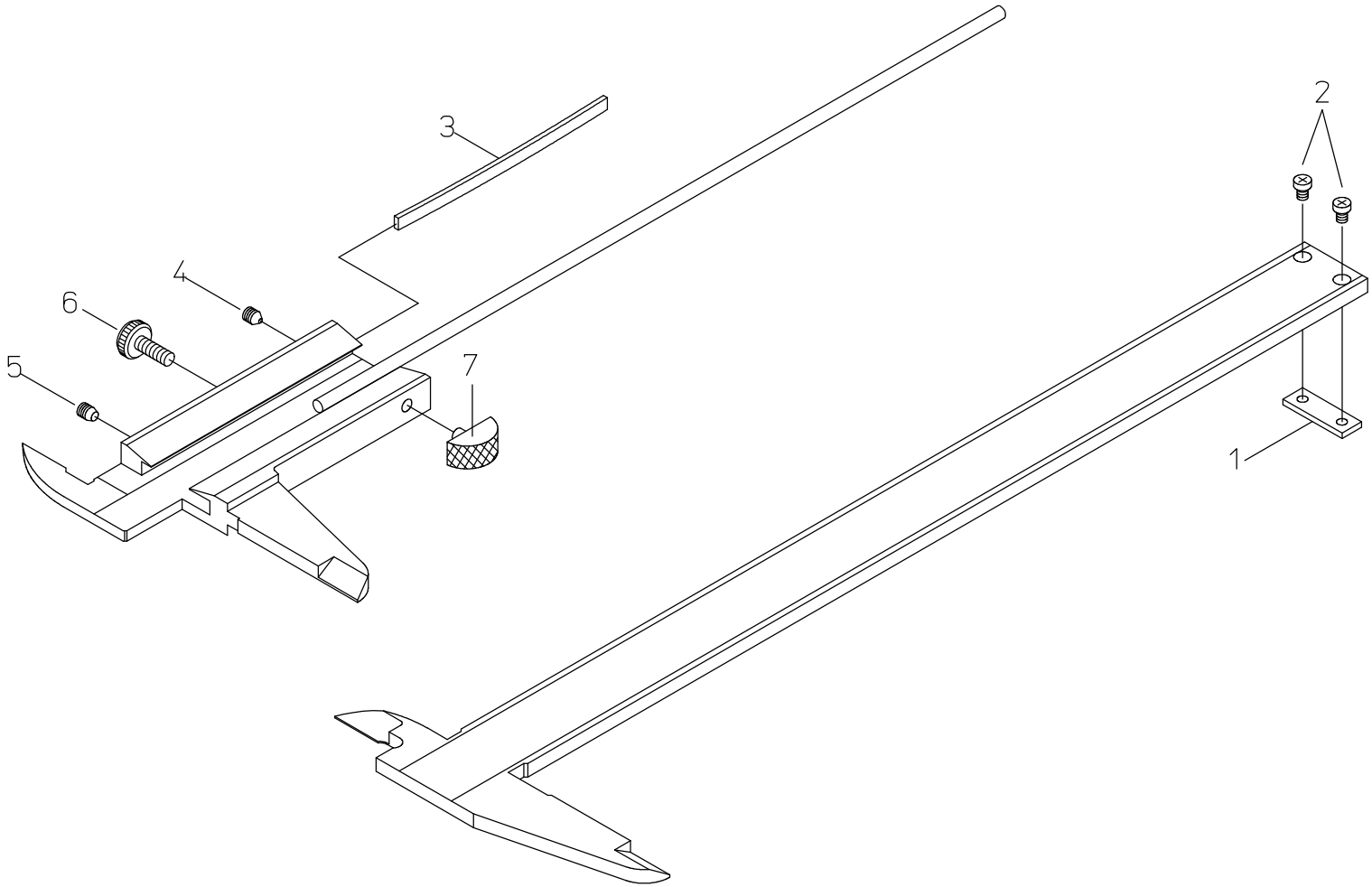

書類NO, 530-07

KEY NO,	ブヒンメイ	PART NAME	販売区分 CATEGORY	CODE NO, コードNO, 530-102 N15R		備考 COMMENTS
1	ﾌﾞﾘｯｼﾞｽﾄｯﾊﾟ	STOPPER, SLIDER		101734		
2	ﾋﾗｺﾈｼﾞ (M2,P0.4)	SCREW, STOPPER		101502		
3	ｽﾗｲﾀﾞｲﾀﾊﾞﾈ	GIB, SLIDER		146504		
4	ｾｯﾄﾈｼﾞ	SCREW, GIB SETTING		146663		
5	ｵｼﾈｼﾞ	SCREW, GIB PRESSING		101820		
6	ｸﾗﾝﾌﾟﾈｼﾞ	CLAMP, SLIDER		135398		
7	ﾕﾋﾞｶｹ	KNOB, SLIDER		900298		