Ref No, 293-36-2009-MAR

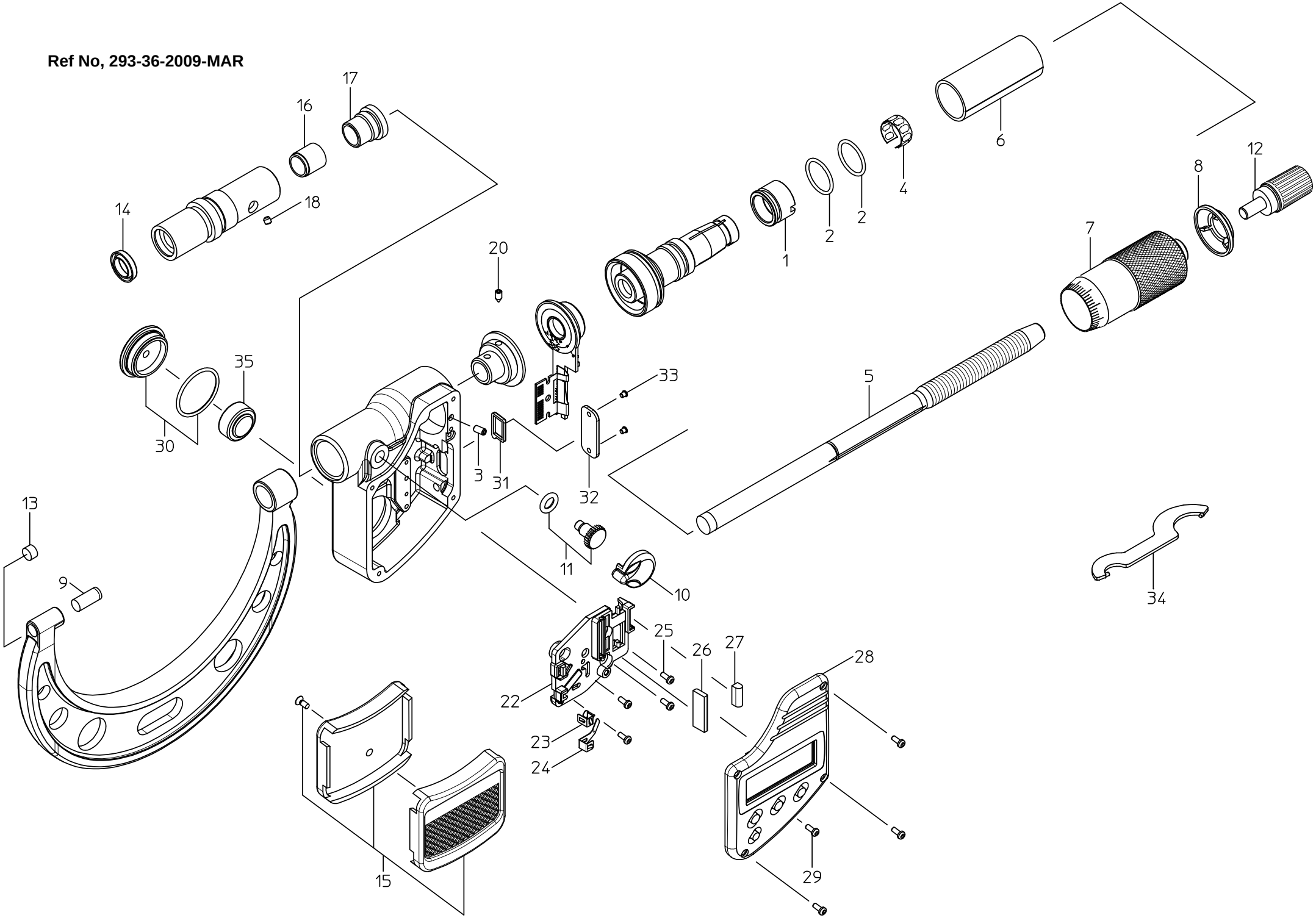

書類NO, 293-36

KEY NO.	ブヒンメイ	PART NAME	販売区分 CATEGORY	CODE NO. コードNO.						備考 COMMENTS
				293-250-10 MDC-125MJB	293-251-10 MDC-150MJB	293-252-10 MDC-175MJB	293-253-10 MDC-200MJB	293-254-10 MDC-225MJB	293-255-10 MDC-250MJB	
				293-350-10 MDC-5″MJB	293-351-10 MDC-6″MJB	293-352-10 MDC-7″MJB	293-353-10 MDC-8″MJB	293-354-10 MDC-9″MJB	293-355-10 MDC-10″MJB	
1	ﾃｰﾊﾟﾅｯﾄ	NUT ADJ.	Y	04AAA516						
2	Oﾘﾝｸﾞ	O-RING	Y	04AAA565						
3	6ｶｸｱﾅﾂｷﾄﾒﾈｼﾞ (M1.7×4)	SET SCREW (M1.7×4)	Y	04AAB479						
4	ﾊﾞﾈﾘﾝｸﾞ	SPRING	Y	305461						
5	ｽﾋﾟﾝﾄﾞﾙ (ﾐﾘ)	SPINDLE (MM)	Y	04AAA585						
	ｽﾋﾟﾝﾄﾞﾙ (ｲﾝﾁ)	SPINDLE (INCH)	Y	04AAA586						
6	ｶﾞｲﾄｳ (ﾐﾘ)	OUTER SLEEVE (MM)	Y	04AAA598	04AAA599	04AAA600	04AAA601	04AAA602	04AAA603	
	ｶﾞｲﾄｳ (ｲﾝﾁ)	OUTER SLEEVE (INCH)	Y	307693						
7	ｼﾝﾌﾞﾙ (ﾐﾘ)	THIMBLE (MM)	Y	04AAA470						
	ｼﾝﾌﾞﾙ (ｲﾝﾁ)	THIMBLE (INCH)	Y	04AAA471						
8	ｼﾝﾌﾞﾙｷｬｯﾌﾟ	THIMBLE CAP		04AAA472						
9	ｱﾝﾋﾞﾙ	ANVIL	Y	200214						
10	ｸﾗﾝﾌﾟﾉﾌﾞ	CLAMP KNOB		04AAA473						
11	ｸﾗﾝﾌﾟﾈｼﾞｸﾐﾀﾃ	CLAMP SCREW ASSY		04AZA274						圧入
12	ﾗﾁｪｯﾄｽﾄｯﾌﾟ	RATCHET STOP		04GZA241						
13	ｱﾝﾋﾞﾙｱﾅｾﾝ	ANVIL PLUG	Y	304337						
14	ﾊﾟｯｷﾝ	RUBBER SEAL	Y	308563						
15	ﾎﾞｳﾈｯｶﾊﾞｰｸﾐﾀﾃ (ﾐﾘ)	HEAT COVER ASSY (MM)		04AZB182	04AZB183	04AZB184	04AZB185	04AZB186	04AZB187	
	ﾎﾞｳﾈｯｶﾊﾞｰｸﾐﾀﾃ (ｲﾝﾁ)	HEAT COVER ASSY (INCH)		04AZB190	04AZB191	04AZB192	04AZB193	04AZB194	04AZB195	
16	ｸﾗﾝﾌﾟｶﾗｰ	CLAMP COLLAR	Y	04AAB473						
17	ﾁｮｳｾｲﾈｼﾞ	ADJUSTMENT SCREW	Y	04AAA486						
18	6ｶｸｱﾅﾂｷﾄﾒﾈｼﾞ (M2×2)	SET SCREW (M2×2)	Y	309289						
20	ｷｰﾋﾞｽ	KEY SCREW	Y	04AAB477						
22	ﾃﾞﾝﾁｹｰｽ	BATTERY BOX	Y	04AAB462						
23	ﾃﾞﾝﾁﾌﾟﾗｽﾀﾝｼ	PLUS CONTACT	Y	04AAA495						
24	ﾃﾞﾝﾁﾏｲﾅｽﾀﾝｼ	MINUS CONTACT	Y	04AAB463						
25	ﾅﾍﾞｺﾈｼﾞ (M1.4×4)	SCREW (M1.4×4)	Y	04GAA905						
26	ｲﾝﾀｺﾈｸﾀ (ｾﾝｻﾖｳ)	INTER CONNECTOR, SENSOR	Y	04AAB464						
27	ｲﾝﾀｺﾈｸﾀ (ｼｭﾂﾘｮｸﾖｳ)	INTER CONNECTOR, OUTPUT	Y	09GAA368						

書類NO, 293-36

KEY NO.	ブヒンメイ	PART NAME	販売区分 CATEGORY	CODE NO. コードNO.						備考 COMMENTS
				293-250-10 MDC-125MJB	293-251-10 MDC-150MJB	293-252-10 MDC-175MJB	293-253-10 MDC-200MJB	293-254-10 MDC-225MJB	293-255-10 MDC-250MJB	
				293-350-10 MDC-5″MJB	293-351-10 MDC-6″MJB	293-352-10 MDC-7″MJB	293-353-10 MDC-8″MJB	293-354-10 MDC-9″MJB	293-355-10 MDC-10″MJB	
28	ﾋｮｳｼﾞﾓｼﾞｭｰﾙｸﾐﾀﾃ (ﾐﾘ)	PANEL MODULE ASSY (MM)	Y	04AZB214A						
	ﾋｮｳｼﾞﾓｼﾞｭｰﾙｸﾐﾀﾃ (ｲﾝﾁ)	PANEL MODULE ASSY (INCH)	Y	04AZB214E						
29	ﾅﾍﾞｺﾈｼﾞ (M1.4×4)	SCREW (M1.4×4)		04AAA566						
30	ﾃﾞﾝﾁﾌﾀｸﾐﾀﾃ	BATTERY LID ASSY		04AZA270						
31	ｺﾈｸﾀﾊﾟｯｷﾝ	CONNECTOR PACKING		09GAA374						
32	ｶﾊﾞｰ	CONNECTOR COVER		04AAA514						
33	ﾅﾍﾞｺﾈｼﾞ (M1.7×2.5)	SCREW (M1.7×2.5)		09GAA376						
34	ｽﾊﾟﾅ	SPANNER		301336						
35	1ｹｲﾘﾊﾞｯﾃﾘﾊﾟｯｸ	BATTERY		938882						
	ﾄﾘｱﾂｶｲｾﾂﾒｲｼｮ	USERS MANUAL		99MAB031M						
	【ｵﾌﾟｼｮﾝ】	【OPTION】								
	ｾﾂｿﾞｸｹｰﾌﾞﾙ 1m	SPC CABLE 1M		05CZA662						
	ｾﾂｿﾞｸｹｰﾌﾞﾙ 2m	SPC CABLE 2M		05CZA663						
	【包装資材】	【PACKING】								
	ｶｸﾉｳﾊﾞｺ	HOUSING CASE		04MZA170	04MZA172	475480	04MZA056		475483	
	ｹｼｮｳｹｰｽ	PAPER CASE		471691		————				
	Bﾀﾞﾝｹｰｽ	CARDBOARD CASE		————		471139	04MAA056		471142	