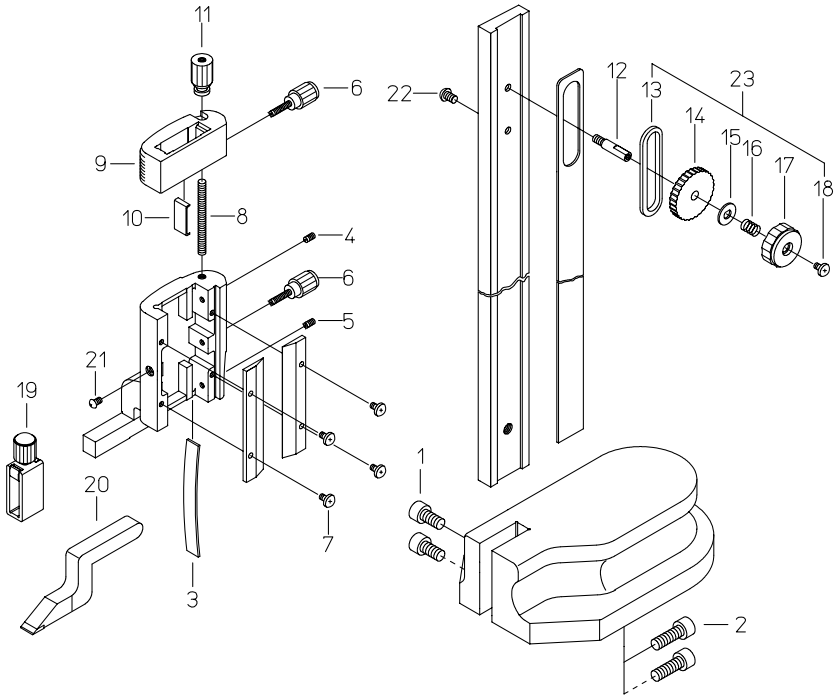

書類NO. 514-04

KEY NO,	ブヒンメイ	PART NAME	販売区分 CATEGORY	CODE NO, コードNO, 514-102 HS-30 / 514-103 HS-12″	514-104 HS-45 / 514-105 HS-18″	514-106 HS-60 / 514-107 HS-24″		備考 COMMENTS
1	ﾛｯｶｸｱﾅﾂｷﾎﾞﾙﾄ	SCREW, BASE		07GAA028		07GAA076		
2	ﾛｯｶｸｱﾅﾂｷﾎﾞﾙﾄ	SCREW, BASE		05GAA051		142006		
3	ｲﾀﾊﾞﾈ	GIB, SLIDER		110076		111820		
4	ｾｯﾄﾈｼﾞ	SCREW, GIB SETTING		110077				
5	ｵｼﾈｼﾞ	SCREW, GIB PRESSING		101654				
6	ｸﾗﾝﾌﾟﾈｼﾞ	CLAMP, SLIDER		05HAA125		07GAA005		
7	ｼﾞｭｳｼﾞﾅﾍﾞｺﾈｼﾞ	SCREW, PLATE		07GAA012				
8	ｵｸﾘﾈｼﾞ	SCREW, FINE ADJ.		134598		134597		
9	ｵｸﾘﾊﾞｺ	CARRIER		07GAA034	07GAA080	07GAA015		
10	ｵｸﾘﾊﾞｺｲﾀﾊﾞﾈ	GIB, CARRIER		07GAA035		07GAA052		
11	ｵｸﾘｸﾞﾙﾏ	NUT, FINE ADJ.		07GAA038		07GAA006		
12	ｼｬﾌﾄ	SHAFT		145890		880158		
13	ﾗｯｸ	RACK, BLADE FINE ADJ.		145889				
14	ﾋﾟﾄﾞｳﾊｸﾞﾙﾏ	PINION. BLADE FINE ADJ.		145891				
15	ﾜｯｼｬ	WASHER		145894				
16	ｽﾌﾟﾘﾝｸﾞ	SPRING		145895				
17	ﾅｯﾄ	NUT, BLADE CLAMP		07GAA040				
18	ｼﾞｭｳｼﾞﾄﾗｽﾈｼﾞ	SCREW, STOPPER		07GAA041				
19	ｽｸﾗｲﾊﾞｸﾗﾝﾌﾟ	CLAMP, SCRIBER		05GZA033				
20	ｽｸﾗｲﾊﾞ	SCRIBER		07GZA000				
21	ｼﾞｭｳｼﾞﾅﾍﾞｺﾈｼﾞ	SCREW		124667				
22	ｼﾞｭｳｼﾞﾅﾍﾞｺﾈｼﾞ	SCREW, STOPPER SLIDER		07GAA087				
23	ﾎﾝｼﾞｬｸｲﾄﾞｳﾌﾞｷｯﾄ	KIT NO (BLADE FINE ADJ)		05GZA006				