Ref No. 137-02B-2004-JUN

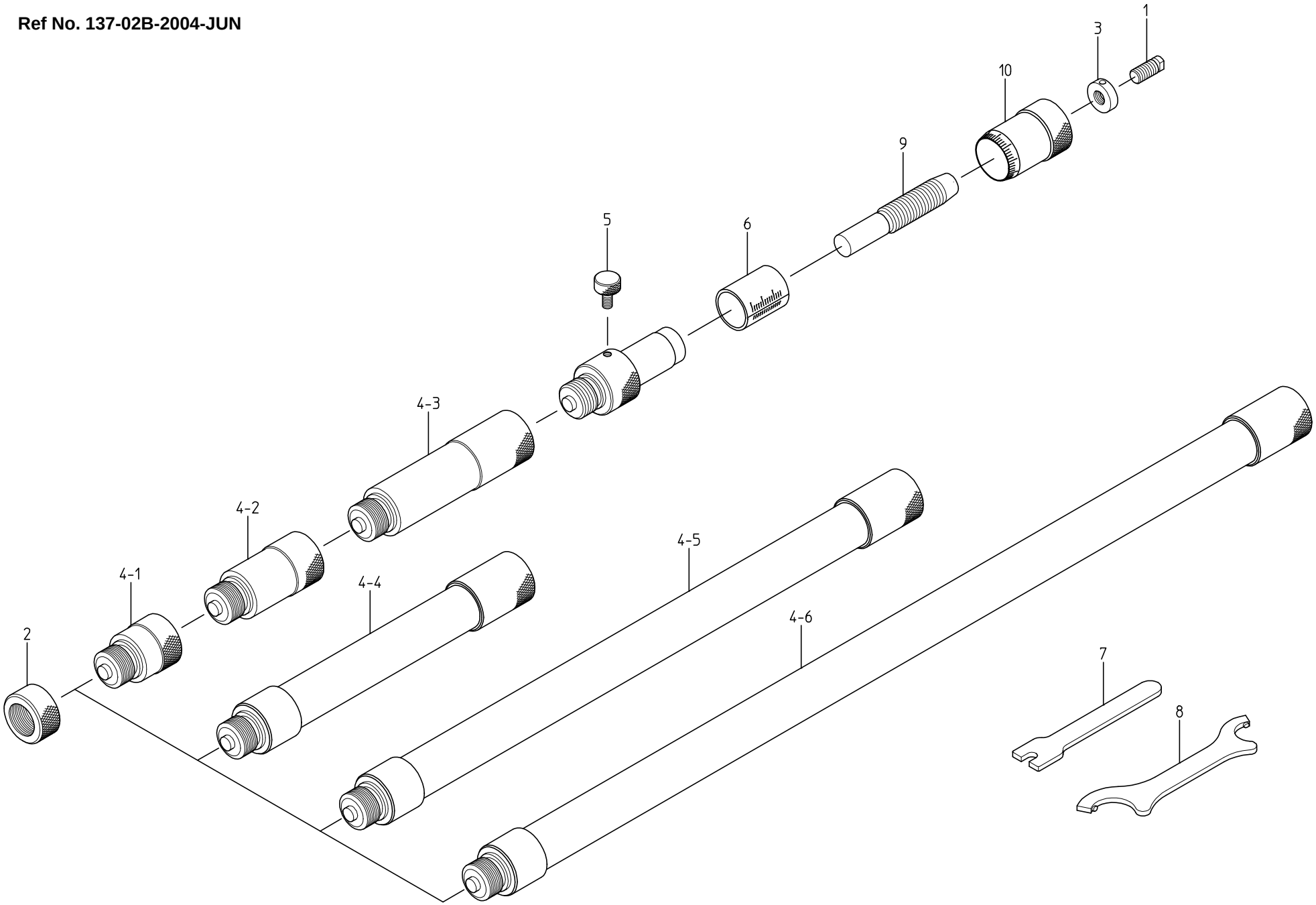

書類NO, 137-02

KEY NO.	ブヒンメイ	PART NAME	販売区分 CATEGORY	CODE NO. コードNO.						備考 COMMENTS
				137-012 (IMZ-E)	137-211 (IMZ-6")	137-212 (IMZ-12")	137-213 (IMZ-20")	137-214 (IMZ-40")	137-215 (IMZ-60")	
				137-014 (IMZ-EW)	137-216 (IMZ-6"W)	137-217 (IMZ-12"W)	137-218 (IMZ-20"W)	137-219 (IMZ-40"W)	137-220 (IMZ-60"W)	
1	ﾁｮｳｾｲｱﾝﾋﾞﾙ(ﾁｯﾌﾟﾂｷ)	ANVIL,ADJ(WITH TIP)	Y	300608(300609)						
2	ｶﾊﾞｰ	NUT,CAP		300610						
3	ﾁｮｳｾｲﾅｯﾄ	LOCK NUT	Y	300607						
4-1	ﾛｯﾄﾞ .5"(ﾁｯﾌﾟﾂｷ)	ROD .5"(WITH TIP)	Y	--------	980506(980520)					
4-2	ﾛｯﾄﾞ 1"(ﾁｯﾌﾟﾂｷ)	ROD 1"(WITH TIP)	Y	--------	980508(980522)					
4-3	ﾛｯﾄﾞ 2"(ﾁｯﾌﾟﾂｷ)	ROD 2"(WITH TIP)	Y	--------	980510(980524)					
4-4	ﾛｯﾄﾞ 4"(ﾁｯﾌﾟﾂｷ)	ROD 4"(WITH TIP)	Y	--------		980512(980526)				
4-5	ﾛｯﾄﾞ 8"(ﾁｯﾌﾟﾂｷ)	ROD 8"(WITH TIP)	Y	--------			980516(980530)			
4-6	ﾛｯﾄﾞ 12"(ﾁｯﾌﾟﾂｷ)	ROD 12"(WITH TIP)	Y	--------				980518(980532)		
5	ｸﾗﾝﾌﾟﾈｼﾞ	CLAMP SCREW		04GAA320						
6	ｶﾞｲﾄｳ	SLEEVE	Y1	300602						
7	ｽﾊﾟﾅ	SPANNER		300611						
8	ｽﾊﾟﾅ	SPANNER		200168						
9	ｽﾋﾟﾝﾄﾞﾙ	SPINDLE	Y1	300604						
10	ｼﾝﾌﾞﾙ	THIMBLE	Y1	300606						
	【包装資材】	【PACKING】								
	ｶｸﾉｳﾊﾟｺ	HOUSING CASE		471299	475122	475124	475126	04MZA157	04MAA216	
	ｹｼｮｳｹｰｽ	PAPER CASE		--------	471685	471430	471431	471433	--------	
	ｸﾗﾌﾄｹｰｽ	PAPER CASE		--------					471203	