Ref No. 102-08-2004-DEC

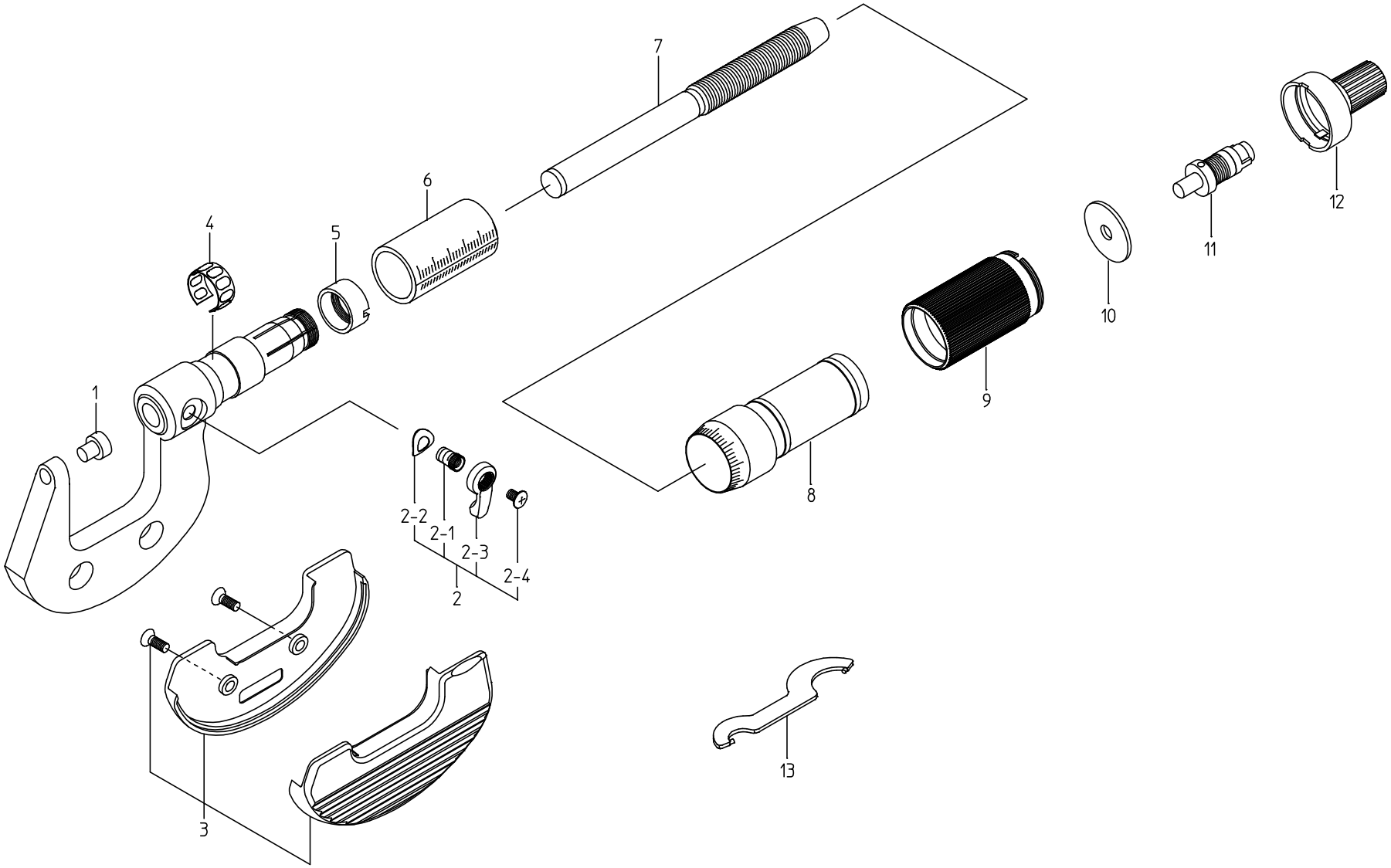

書類NO, 102-08

KEY NO.	ブヒンメイ	PART NAME	販売区分 CATEGORY	CODE NO. コードNO. 102-701 M317-25	102-707 M327-25	102-711 M317-1"	102-717 M327-1"		備考 COMMENTS
1	ｱﾝﾋﾞﾙ	ANVIL	Y	200355					
2	ｸﾗﾝﾌﾟ	CLAMP ASSY		04AZB005					
2-1	ｸﾗﾝﾌﾟﾈｼﾞ	CLAMP SCREW		200421					
2-2	ｽﾌﾟﾘﾝｸﾞﾜｯｼｬ	SPRING WASHER		200420					
2-3	ｸﾗﾝﾌﾟﾊﾝﾄﾞﾙ	CLAMP HANDLE		04AAB209					
2-4	ﾄﾒﾈｼﾞ	SET SCREW		200424					
3	ﾌﾚｰﾑｶﾊﾞｰｸﾐﾀﾃ	FRAME COVER ASSY		04AZB006	04AZB007	04AZB008	04AZB009		
4	ﾊﾞﾈﾘﾝｸﾞ	SPRING	Y	305461					
5	ﾃｰﾊﾟﾅｯﾄ	NUT, ADJ	Y	200415					
6	ｶﾞｲﾄｳ	OUTER SLEEVE	Y	200117	200120	200116	200119		
7	ｽﾋﾟﾝﾄﾞﾙ	SPINDLE	Y	200127		200128			
8	ｼﾝﾌﾞﾙ	THIMBLE	Y	04AAB203		04AAB204			
9	ｼﾝﾌﾞﾙｽﾘｰﾌﾞ	SLEEVE, THIMBLE	Y	04AAB205					
10	ｵｻｴｲﾀ	WASHER		04AAB206					
11	ﾗﾁｪｯﾄｸﾐﾀﾃ	RATCHET ASSY		04AZB004					
12	ｽﾋﾟｰﾀﾞｽﾘｰﾌﾞ	SLEEVE, SPEEDER		04AAB208					
13	ｽﾊﾟﾅ	SPANNER		301336					
	【包装資材】	【PACKING】							
	ｶｸﾉｳﾊﾞｺ	HOUSING CASE		475002					
	ｹｼｮｳｹｰｽ	PAPER CASE		471078					