Ref No,103-11-2009-FEB

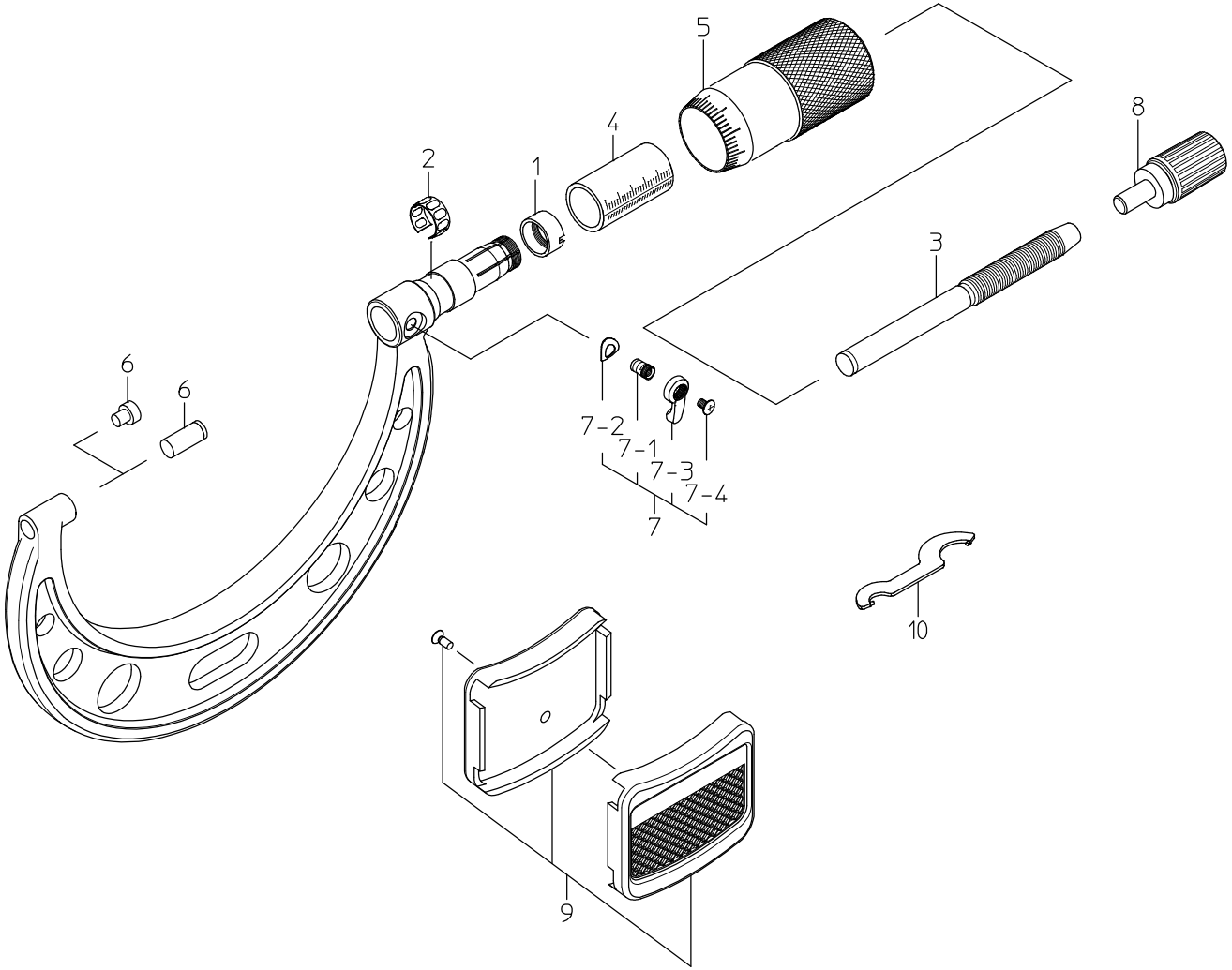

書類NO, 103-11

KEY NO.	ブヒンメイ	PART NAME	販売区分 CATEGORY	CODE NO. コードNO. 103-139-10 OM-75	103-140-10 OM-100	103-141-10 OM-125	103-142-10 OM-150	103-143-10 OM-175	103-144-10 OM-200	備考 COMMENTS
1	ﾃｰﾊﾟﾅｯﾄ	NUT,ADJ	Y	200415						
2	ﾊﾞﾈﾘﾝｸﾞ	SPRING	Y	305461						
3	ｽﾋﾟﾝﾄﾞﾙ	SPINDLE	Y	200127						
4	ｶﾞｲﾄｳ	SLEEVE	Y	200216	200217	200218	200219	200220	200221	
5	ｼﾝﾌﾞﾙ	THIMBLE	Y	200124						
6	ｱﾝﾋﾞﾙ	ANVIL	Y	200355		200214				
7	ｸﾗﾝﾌﾟｸﾐﾀﾃ	CLAMP ASSY		950062		950277				
7-1	ｸﾗﾝﾌﾟﾈｼﾞ	CLAMP SCREW		200421		200867				
7-2	ｽﾌﾟﾘﾝｸﾞﾜｯｼｬ	SPRING WASHER		200420						
7-3	ｸﾗﾝﾌﾟﾊﾝｼｭ	CLAMP HANDLE		200425						
7-4	ﾄﾒﾈｼﾞ	SETSCREW		200424						
8	ﾗﾁｪｯﾄ	RATCHET STOP		04GZA239						
9	ﾎﾞｳﾈﾂｶﾊﾞｰｸﾐﾀﾃ	HEAT COVER ASSY		04GZA194	04GZA195	04GZA196	04GZA197	04GZA198	04GZA199	
10	ｽﾊﾟﾅ	SPANNER		301336						
	【包装資材】	【PACKING】								
	ｶｸﾉｳﾊﾞｺ	HOUSING CASE		475003	475004	475005	475006	475229	04MZA056	
	ｹｼｮｳｹｰｽ	PAPER CASE		471079	471080	471081	471082	471433	------	
	Bﾀﾞﾝｹｰｽ	CARDROARD CASE		------					04MAA056	