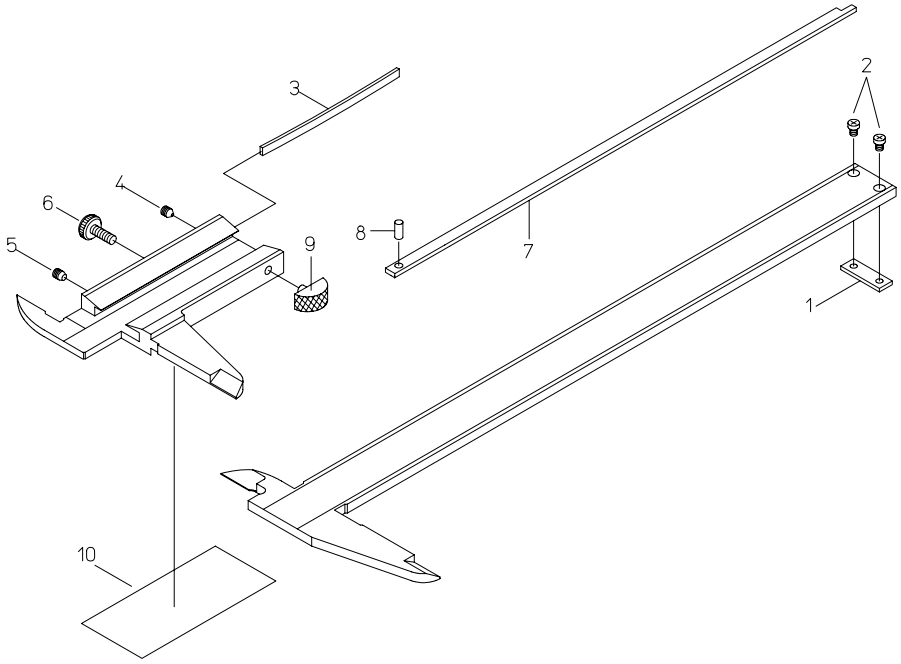

書類NO, 530-01

KEY NO,	ブヒンメイ	PART NAME	販売区分 CATEGORY	CODE NO, コードNO,						備考 COMMENTS
				530-101 N15	530-104 N6″	530-125 N6″X	530-108 N20	530-114 N8″	530-109 N30	
				530-122 N15P	530-105 N6A		530-123 N20P	530-116 N8A	530-124 N30P	
					530-312 N6″P			530-118 N8″P		
1	ﾌﾞﾘｯｼﾞｽﾄｯﾊﾟ	STOPPER SLIDER		101734					101517	
2	ﾋﾗｺﾈｼﾞ	SCREW, STOPPER		101502					101518	
3	ｲﾀﾊﾞﾈ	GIB, SLIDER		101823					101969	
4	ｾｯﾄﾈｼﾞ	SCREW, GIB SETTING		101562					135426	
5	ｵｼﾈｼﾞ	SCREW, GIB PRESSING		101820					135427	
6	ｸﾗﾝﾌﾟﾈｼﾞ	CLAMP, SLIDER		135398					142150	
7	ﾃﾞﾌﾟｽﾊﾞｰ	DEPTH BAR, BLADE		142839			142840		142841	
8	ﾘﾍﾞｯﾄ	PIN, DEPTH BAR		101838						
9	ﾕﾋﾞｶｹ	KNOB, SLIDER		900298					905193	
10	ｶﾝｻﾝﾋｮｳ	CONVERSION TABLE		–		101995	–			