Ref No,537-56-2008-JAN

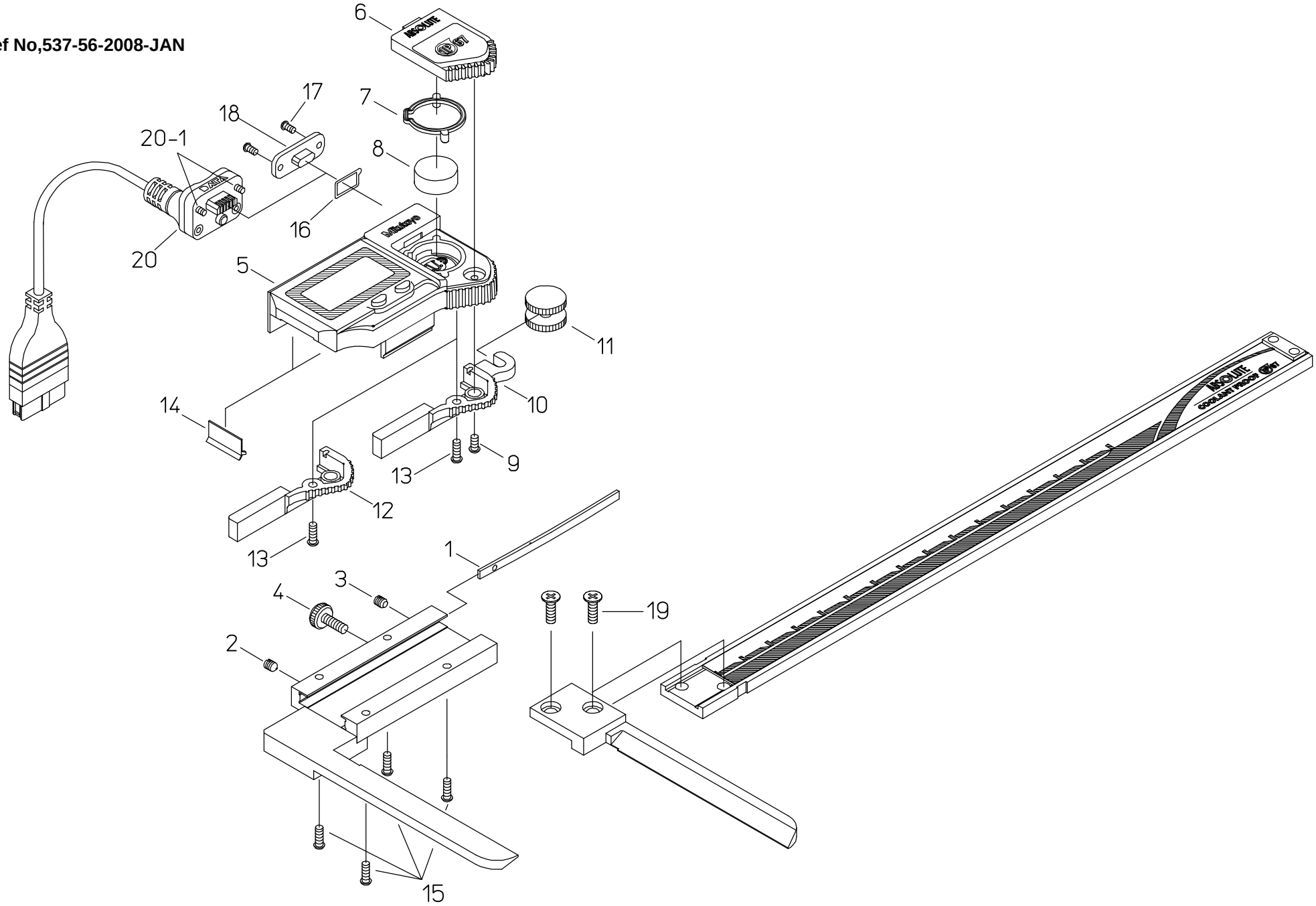

書類NO, 573-56

KEY NO,	ブヒンメイ	PART NAME	販売区分 CATEGORY	CODE NO. コードNO. 573-642 NTD14-20PMX	573-643 NTD14-20PKX	573-742 NTD14-8"PMX		備考 COMMENTS
1	ｲﾀﾊﾞﾈ	GIB, SLIDER		06ACA200				
2	ﾈｼﾞ､ｾｯﾄﾈｼﾞ	SCREW, GIB SETTING		05CAB037				
3	ﾈｼﾞ､ｵｼﾈｼﾞ	SCREW, GIB PRESSING		05CAB036				
4	ﾈｼﾞ､ｸﾗﾝﾌﾟ	CLAMP, SLIDER		541985				
5	ﾋｮｳｼﾞﾓｼﾞｭｰﾙAssy	READING UNIT ASSY	Y	05SZA315A		05SZA315B		
6	ﾃﾞﾝﾁﾌﾞﾀ	COVER CELL		05SZA317				
7	ﾃﾞﾝﾁﾌﾞﾀﾊﾟｯｷﾝ	PACKING,COVER OF CELL		05SAA372				
8	ﾎﾞﾀﾝﾃﾞﾝﾁ	BATTERY		938882				
9	ﾈｼﾞ､ｼﾞｭｳｼﾞﾅﾍﾞｺ(M1.7×5)	SCREW,COVER OF CELL		05SAA379				
10	ﾛｰﾗ､ｱｰﾑ	HOOK, ROLLER		05CAB011	-	05CAB011		
11	ﾛｰﾗ	ROLLER		141771	-	141771		
12	ﾕﾋﾞｶｹ	KNOB,SLIDER		-	05CAB012	-		
13	ﾈｼﾞ､ｼﾞｭｳｼﾞﾅﾍﾞｺ(ﾖﾋﾞ2×5.8)	SCREW, HOOK ROLLER		05CAA893				
14	ﾜｲﾊﾟｰ	WIPER	Y	198551				
15	ﾈｼﾞ､ｼﾞｭｳｼﾞﾅﾍﾞｺ(ﾖﾋﾞ2×10.5)	SCREW, READING UNIT ASSY	Y	05CAA926				
16	ｺﾈｸﾀﾊﾟｯｷﾝ	PACKING,CONNECTOR		09GAA374				
17	ﾈｼﾞ､ｼﾞｭｳｼﾞﾅﾍﾞｺ(M1.7×2.5)	SCREW,CAP CONNECTOR		09GAA376				
18	ｺﾈｸﾀｷｬｯﾌﾟ	CAP CONNECTOR		09GAA372				
19	ﾈｼﾞ､ｼﾞｭｳｼﾞﾅﾍﾞｺ(M3×5)	SCREW, JAW		124667				
	【ｵﾌﾟｼｮﾝ】	【OPTION】						
20	ｾﾂｿﾞｸｹｰﾌﾞﾙ(1M)	CONNECTING CABLE(1M)		05CZA624				
	ｾﾂｿﾞｸｹｰﾌﾞﾙ(2M)	CONNECTING CABLE(2M)		05CZA625				
20-1	ﾈｼﾞ､ｼﾞｭｳｼﾞﾅﾍﾞｺ(ﾖﾋﾞ1.7×6.5)	SCREW,CONNECTING CABLE		05CAA958				
	【梱包資材】	【PACKING】						
	ｹｰｽ､PPｹｰｽ	PP CASE		905806				
	ｹｰｽ､ｶﾗｰ(1ｺ)	COLOR CASE		142447				