Ref No,550-14-2008-JUL

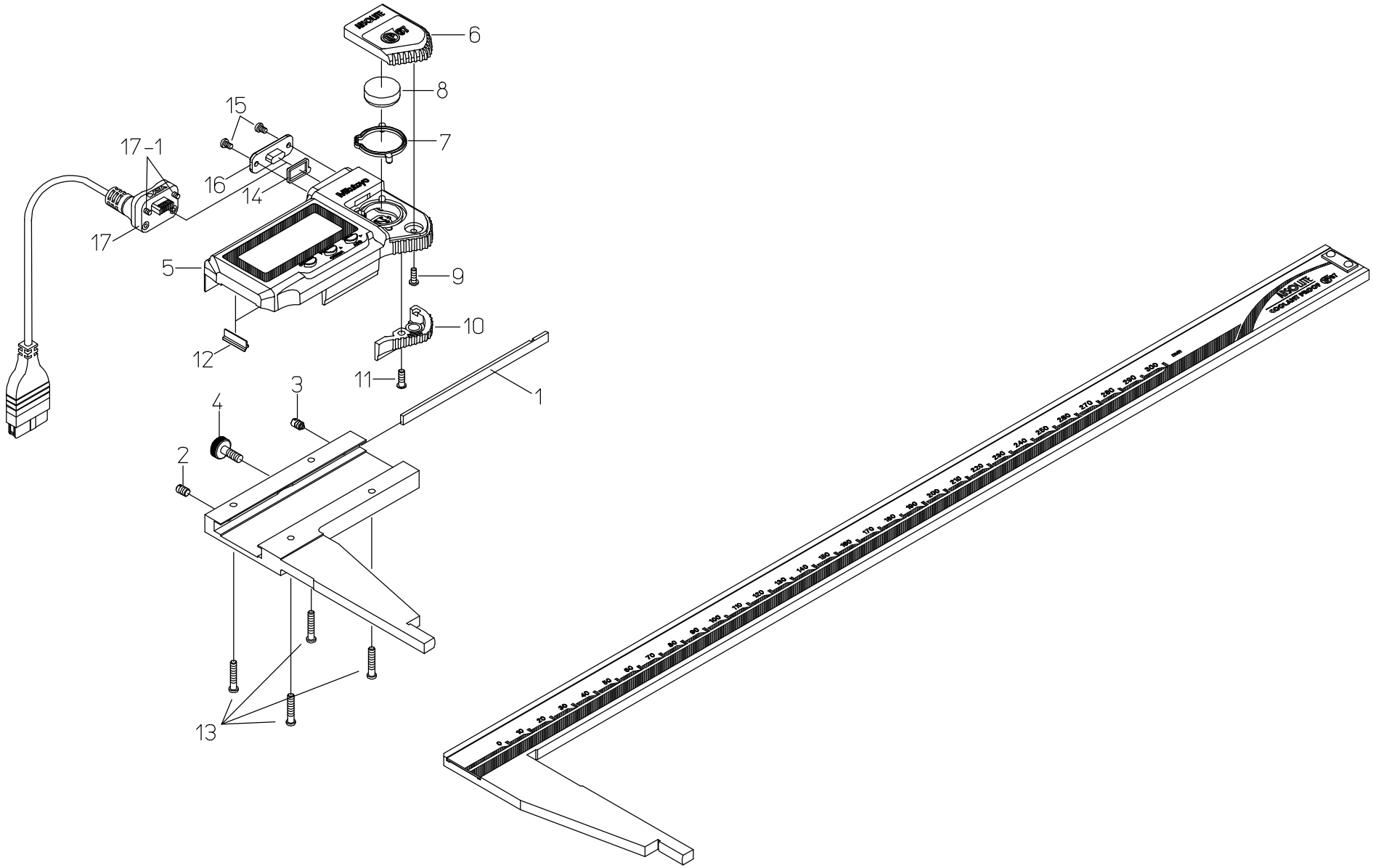

書類NO, 550-14

KEY NO,	ブヒンメイ	PART NAME	販売区分 CATEGORY	CODE NO. コードNO. 550-331-10 CDC-P30PMX	550-341-10 CDC-P12″PMX		備考 COMMENTS
1	ｲﾀﾊﾞﾈ	GIB, SLIDER		101969A			
2	ﾈｼﾞ､ｾｯﾄﾈｼﾞ	SCREW, GIB SETTING		135426			
3	ﾈｼﾞ､ｵｼﾈｼﾞ	SCREW, GIB PRESSING		135427			
4	ﾈｼﾞ､ｸﾗﾝﾌﾟ	CLAMP, SLIDER		541985			
5	ﾋｮｳｼﾞﾓｼﾞｭｰﾙASSY	READING UNIT ASSY	Y	06ADJ379A	06ADJ379B		
6	ﾃﾞﾝﾁﾌﾞﾀ	COVER CELL		05SZA317			
7	ﾃﾞﾝﾁﾌﾞﾀﾊﾟｯｷﾝ	PACKING, COVER OF CELL		05SAA372			
8	ﾎﾞﾀﾝﾃﾞﾝﾁ	BATTERY		938882			
9	ﾈｼﾞ､ｼﾞｭｳｼﾞﾅﾍﾞｺ(M1.7×5)	SCREW, COVER OF CELL		05SAA379			
10	ﾕﾋﾞｶｹ	KNOB, SLIDER		06ADG087			
11	ﾈｼﾞ､ｼﾞｭｳｼﾞﾅﾍﾞｺ(ﾖﾋﾞ2×5.8)	SCREW, HOOK ROLLER		05CAA893			
12	ﾜｲﾊﾟｰ	WIPER	Y	05CAA981			
13	ﾈｼﾞ､ｼﾞｭｳｼﾞﾅﾍﾞｺ(ﾖﾋﾞ2×10.5)	SCREW, READING UNIT ASSY	Y	05CAA926			
14	ｺﾈｸﾀﾊﾟｯｷﾝ	PACKING, CONNECTOR		09GAA374			
15	ﾈｼﾞ､ｼﾞｭｳｼﾞﾅﾍﾞｺ(ﾖﾋﾞ1.7×2.5)	SCREW, CAP CONNECTOR		09GAA376			
16	ｺﾈｸﾀｷｬｯﾌﾟ	CAP CONNECTOR		09GAA372			
	【ｵﾌﾟｼｮﾝ】	【OPTION】					
17	ｾﾂｿﾞｸｹｰﾌﾞﾙ(1M)	CONNECTING CABLE(1M)		05CZA624			
	ｾﾂｿﾞｸｹｰﾌﾞﾙ(2M)	CONNECTING CABLE(2M)		05CZA625			
17-1	ﾈｼﾞ､ｼﾞｭｳｼﾞﾅﾍﾞｺ(M1.7×6.5)	SCREW, CONNECTING CABLE		05CAA958			
	【梱包資材】	【PACKING】					
	ｹｰｽ､ｷﾊﾞｺ	WOODEN BOX		142532			
	ｹｰｽ､ｽﾘｰﾌﾞｹｰｽ	SLEEVE CASE		143053			